Input adjustment for 0~10V Unit

Connect the main power supply of 220VAC to terminals 1 and 2 of JP 2 (Diagram A)

I. **Zero Adjustment**

Jumper terminals 5 and 6 of JP4 (Diagram A)
Connect the negative lead of the voltmeter to terminal 6 of JP 4 (Diagram A)
Measure pin 6 of U1 with the positive lead (Snapshot #1).
Adjust R43 for a coarse reading of .1VDC (Diagram A)
Adjust R46 for a fine reading of .001VDC (Diagram A)

II. **Sensitivity Adjustment**

Jumper terminals 5 and 6 of JP4 (Diagram A)
Keep the negative lead of the voltmeter on terminal 6 of JP 4 (Diagram A)
Measure the third resistor up from the regulator on it's left side (Snapshot #2)
Adjust R12 (Diagram A) for -.030VDC (-30 millivolts dc)

III. **Span Adjustment**

Jumper terminals 4 and 5 of JP4
Connect 80 PSI air to the input.
Plug the Air Output.
Adjust R6 (Diagram A) for 40 PSI on the front guage.

Diagram A

Wiring of E/P CONVERTER:

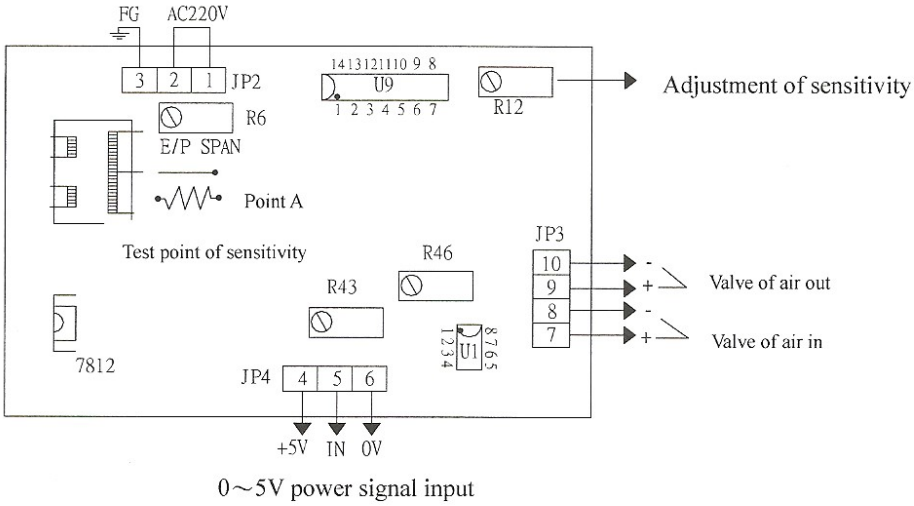

0～5V power signal input

Snapshot #1

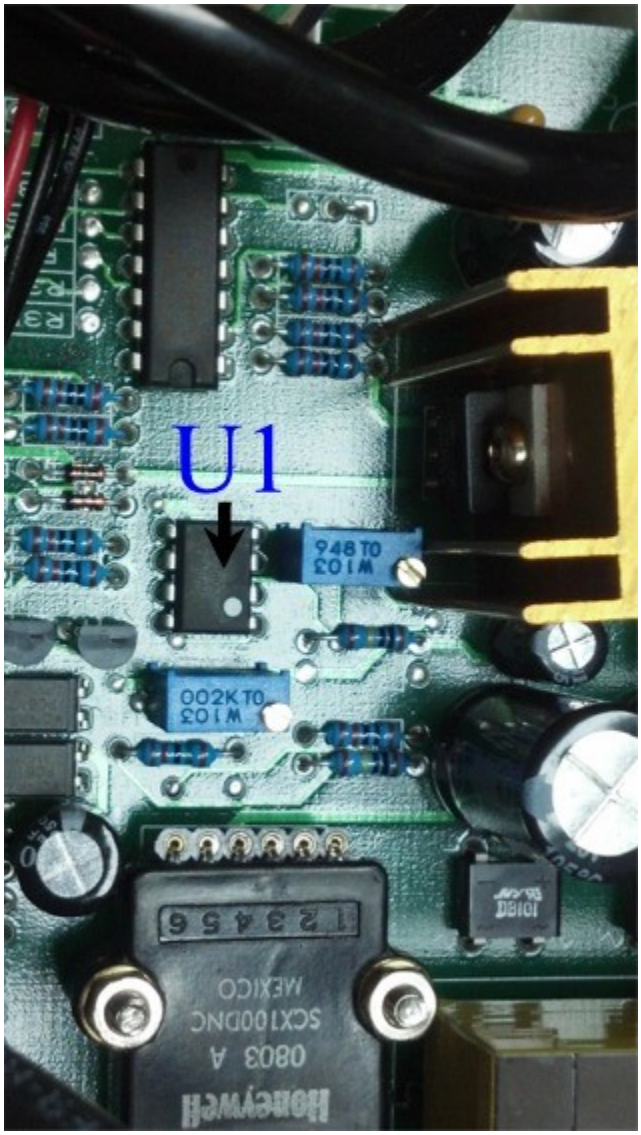

Snapshot #2